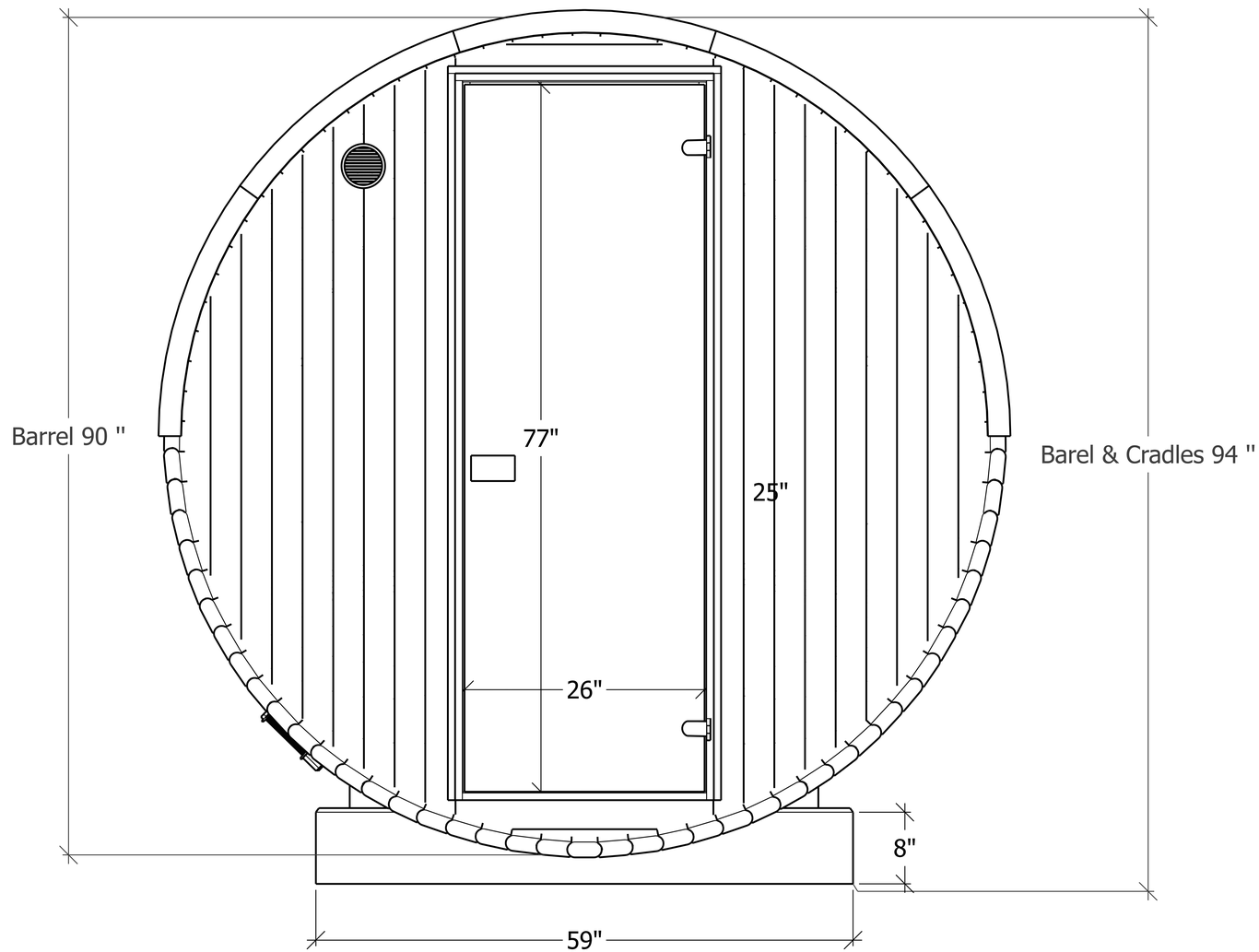
Barrel 90 "
77"
25"
Barel & Cradles 94 "
26"
8"
59"